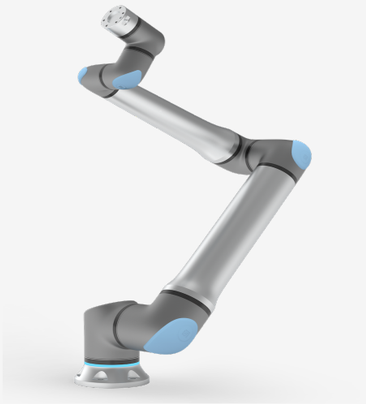

UR20

Technical specification

The UR20, the first of our next-generation high performance cobots, has been redesigned from the ground up to provide up to 30% more speed and torque, advanced motion control capabilities, and first-class user experience.

Today, more than 100,000 UR collaborative industrial robots have been delivered to customers across industries and around the world. The newest series of heavy payload cobots brings unparalleled performance, adaptability and an unparalleled user experience.

Updated May 2025.

Copyright © 2025 by Universal Robots A/S. All rights reserved.

UR20

General specification

Payload	20 kg (44.1 lbs) 25 kg (55.1 lbs) with boundary conditions according to manual.
Reach	1750 mm (68.9 in)
Degrees of freedom	6 rotating joints
Programming	12 inch touchscreen with PolyScope graphical user interface
Power consumption (average)	
Maximum power	750 W
Moderate operating settings	500 W
Operating temperature range	Ambient temperature: 0-50˚C (32-122˚F)
Safety functions	21 configurable safety functions
In compliance with	EN ISO 13849-1 (PLd Category 3), EN ISO 10218-1 and UL 1740
Joint architecture	2-1-3

UR20 Robot Arm

Performance

Force sensing, tool flange/torque sensor	**Force, x-y-z**	**Torque, x-y-z**
Range	± 200.0 N	± 20.0 Nm
Precision	± 5.5 N	± 0.2 Nm
Accuracy	± 10.0 N	± 0.1 Nm

Movement

Max TCP speed	5 m/s	
Pose repeatability per ISO 9283	± 0.1 mm	
Axis movement	**Working range**	**Maximum speed**
Base	± 360°	± 120˚/s
Shoulder	± 360°	± 120˚/s
Elbow	± 360°	± 150˚/s
Wrist 1	± 360°	± 210˚/s
Wrist 2	± 360°	± 210˚/s
Wrist 3	± 360°	± 210˚/s

Features

IP Classification	IP65
Cleanroom classification ISO 14644-1 **Velocity and payload*	Class 6 at ≤ 80%*
Noise	< 65 dB(A)
Status identification	Light ring at robot base
Arm mounting	Any orientation
I/O Ports at tool flange	
Digital In	2
Digital Out	2
Analog In	2 or 1 RS-485
Power supply voltage	12/24 V
Power supply	2 A (Dual pin), 1 A (Single pin)

Physical

Footprint	Ø245 mm
Materials	Aluminum, plastic, steel
Tool flange	EN ISO-9409-1-80-6-M8
Connector type	M8 8-pin female
Cable length (robot arm)	6 m (236 in)
Weight without cable	64 kg (141.1 lbs)
Humidity	≤ 90% RH (non-condensing)

Contact

Universal Robots A/S
Energivej 51
5260 Odense
Denmark

+45 89 93 89 89
sales@universal-robots.com
universal-robots.com

3-Postion Enabling Teach Pendant

Features

IP classification	IP54
Humidity	≤ 90% RH (non-condensing)
Display resolution	1280 x 800 pixels

Physical

Materials	Plastic
Teach pendant size (W x H x D)	300 mm x 231 mm x 50 mm (11.8 in x 9.1 in x 1.97 in)
Weight	1.8 kg (3.961 lbs) including 1 m of teach pendant cable
Cable length	4.5 m (177.17 in)

Control Box

Features

IP classification	IP44
Humidity	≤ 90% RH (non-condensing)
I/O Ports	
Digital In	16
Digital Out	16
Analog In	2
Analog Out	2
Quadrature digital inputs	4
I/O Power Supply	24V, 2A
Industrial protocols	Modbus TCP (Client/Server) Ethernet/IP Adapter PROFINET device, PROFIsafe ROS/ROS2
Hardware interfaces	Ethernet 1 Gb/s USB 2.0 USB 3.0 Mini DisplayPort Injection Moulding Machine Interface (SPI AN-146 & Euromap-67)*
Power Source	100-240 VAC, 47-440 Hz

**Only valid for OEM version.*

Physical

Control Box Size (W x H x D)	460 mm x 449 mm x 254 mm (18.2 in x 17.6 in x 10 in)
Weight	12 kg (26.5 lbs)
Materials	Powder coated steel

The controlbox is also available in an OEM version.

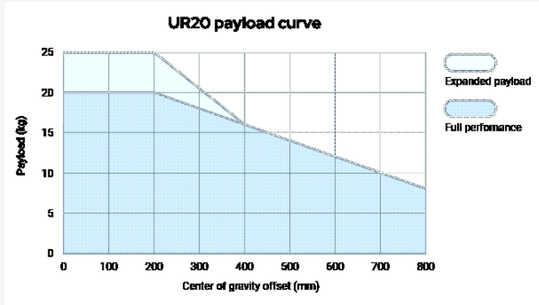

Interface for UR20 base flange

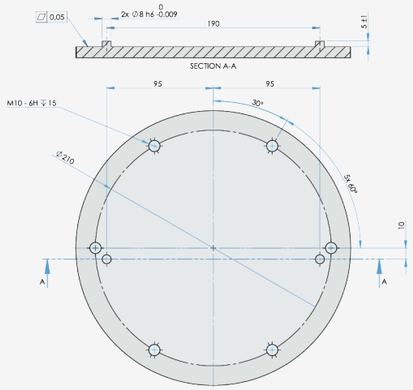

Tool flange for UR20

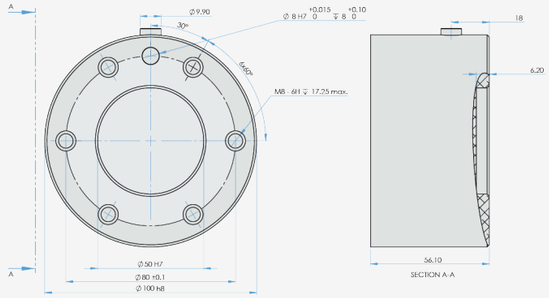

Dimensions and reach UR20

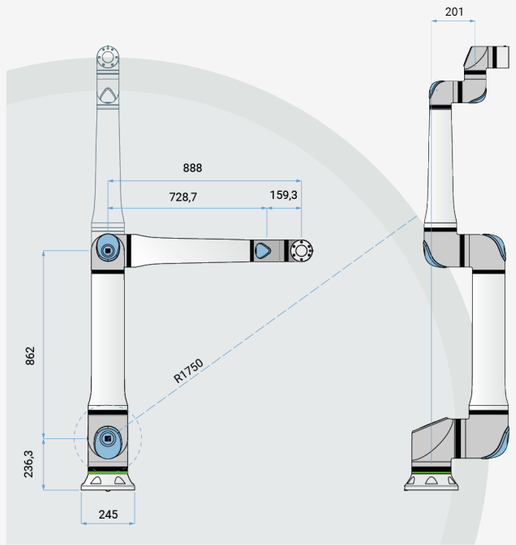

March 2026

UNLESS OTHERWISE SPECIFIED:

Dimensions are in millimeters. Tolerance ± 0,1 mm ± 0,5˚